Plaquette A550-UK Finol_Mise en page 1 13/04/2022 14:42 Page1

Actioil A550 treatment
Versatile, non-aggressive and durable

1 – Actions, results and characteristics

Actions

- Protects and optimizes fuel:
  - Lubricity
  - Cetane index
  - Oxidation stability
  - Keeping the cold
- Dissolves sludge and sediments
- Atomizes water particles
- Preserves the functioning of pumps and injectors
- Protects the tank from corrosion or erosion by depositing a protective film
- Inhibitor of bacteria, prevents the formation of bacteria
- Prevents clogging partly due to biofuels
- Prevents catalyst encrusting (engines Euro5 et Euro6)

Results

- Tanks without corrosion or erosion
- Clean fuel, regaining its initial performance
- Fuel life is extended
- Reduced polluting emissions
- Protected engines, restored fuel consumption and performance

Characteristics

- Totally soluble in diesel
- Compatible with Euro6 engines
- Suitable for all types of fuel tanks

2 – The detailed composition of the product

9 groups of chemical components to treat 22 problems

Fonctions A550	Actions of each of the 9 groups of chemical components								
22 FONCTIONS OF A550 TREATMENT	GROUP 1	GROUP 2	GROUP 3	GROUP 4	GROUP 5	GROUP 6	GROUP 7	GROUP 8	GROUP 9
1 ANTIBACTERIAL									
2 ANTIYEASTS									
3 CRYPTOGAMIC (ANTI-MOLD)									
4 LUBRICITY									
5 FILMING									
6 MISCIBILITY AGENT									
7 FLUIDITY AGENT									
8 ORGANIC STABILIZER									
9 IMPROVED STORAGE STABILITY									
10 ANTIOXYDANT									
11 CORROSION INHIBITOR									
12 DISPERSING									
13 DETERGENT									
14 ANTIFOAM	Silicone free								
15 CETANE CORRECTOR									
16 COMBUSTION IMPROVER									
17 NESTED REDUCTION									
18 HYDROPHILIC									
19 TLF IMPROVER									-21 à -25°C
20 FLOW POINT IMPROVER									
21 ANTIPARAFFIN									
22 ANTICRYSTALLIZATION									

They trust us around the world and they are our partners

CERTIFICATIONS:

Actioil A550 complies with European standard REACH.
Registered in France with the INRS n° 101423, and MEEDDAT n° 11410.
Registered in Brazil with the ANP n° 638 and Brazilian Ministry of the Environment n° 003/2010

Scientific partnerships

Brazil: University of Porto Alegre and Institute of Technology of Petroleum Products of Rio de Janeiro

Finol Oils Unlimited
3 Stannaway Drive, Crumlin - Dublin 12 - D12 X2PN - IRELAND
Tel: +353 (0)1 4555 484 - Mail: finol@finol.ie
www.finol.ie

www.actioil.com

A550

Diesel treatment, by Actioil

PROTECTED ENGINES AND SATISFIED CUSTOMERS: OUR ASSETS, YOUR ASSETS

- Extending the life of treated equipment
- Stabilization and remediation of diesel fuel
- Suppression of bacteria and corrosion risks
- Lower maintenance costs
- Up to 6% fuel economy

Actioil, The Friend of the Air

www.actioil.com

Plaquette A550-UK Finol_Mise en page 1 13/04/2022 14:42 Page4

Why treat diesel?

1 – The phenomenon of condensation inside the tanks

- Weather conditions generate variations in temperature
- Diesel fuel contains water in a soluble state
- Damp air gets inside the tanks
- High-pressure engines generate a return of hot fuel into the fuel tank

Consequences:

- Condensation creation
- Development of micro-organisms (bacteria, fungi, yeast)
- Corrosion of metal tanks
- Erosion of resin or fiberglass tanks

2 – The composition of diesel fuels

- Diesel can now contain biofuels (EMAG, etc.)
- **Sludge and sediment may have mixed with diesel during storage**
- Diesel contains less and less of **Sulphur** < 10 ppm in 2011 to 400 ppm in 1996

Consequences:

- Fuel destabilization (oxidation)
- Bacterial overgrowth
- Lubrication problems
- Filter clogging

Evolution of European regulations on the methyl ester content of fuels

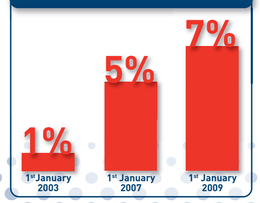

Examples of contamination and corrosion:

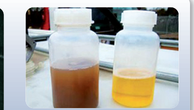

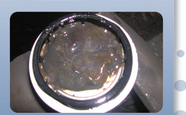

Proliferation of microorganisms

The properties of diesel fuel deteriorate and engine performance degrades

3 – Explanation in pictures

Condensation phenomenon

Temperature differences due to climatic variations generate condensation from water:

- **Contained in the ambient air**
- **Dissolved in the diesel**

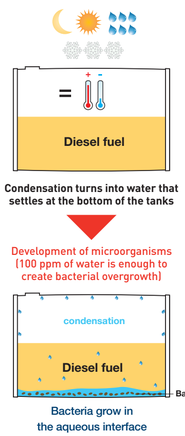

The performance of high-pressure engines generates a return of hot fuel in the tanks.

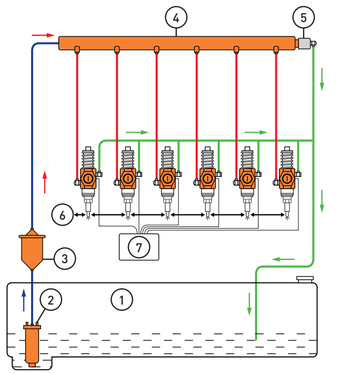

Diesel engine with feed ramp and electronic pump injectors (6 cyl.)

① Tank
② High pressure pumps
③ Fuel filter
④ Common feed rail
⑤ Pressure regulator
⑥ Injectors-Pump
⑦ Electronic unit

Examples of engines that can be treated with Actioil A550

Public works machinery

Agricultural equipment

Trucks

Boats

Generators and industrial machinery

Simple to use, maximum duration of action

1 – Summary of processing procedures

General treatment

- **Euro 1 – 2 – 3 – 4 – 5**

1 L Actioil A550 for 100L of gasoil capacity to pour into the tank before filling.

→ **Protection 1 year, +/- 100 000 km or 500h working hours.**

- **Euro 6**

0.5 L Actioil A550 for 100L of gasoil capacity to pour into the tank before filling.

→ **To renew twice a year, +/- 50 000 km or 250h working hours.**

Extreme Cold Treatment

Between 1L and 4L of Actioil A550 per 1000L of diesel to be poured into the tank before filling.

→ **Protection against crystallization of gas oil T° up to -28°.**

Treatment and protection of storage tanks under 25 years

- **General treatment**

In case of polluted tank:
3 liters of Actioil A550 for 1000L of diesel to pour into the tank before filling.
Wait 2 hours before use.
After one year apply the procedure of preventive treatment..

- **Preventive treatment**

In case of a new installation, following a general treatment or following a mechanical cleaning:
1 liter of Actioil A550 for 1000L of diesel to pour into the tank before filling.
Wait 2 hours before use.
The treatment must be renewed every year.

2 – Containers

- **Jerrycan of 1L, 5L, 20L**
- **200L barrel**
- **1000L IBC TANK**

Actioil, The Friend of the Air